"*" Pivot Dimension

ROHS Component

PO(X)	CURRENTRATING(Ω)
5	50
7	75

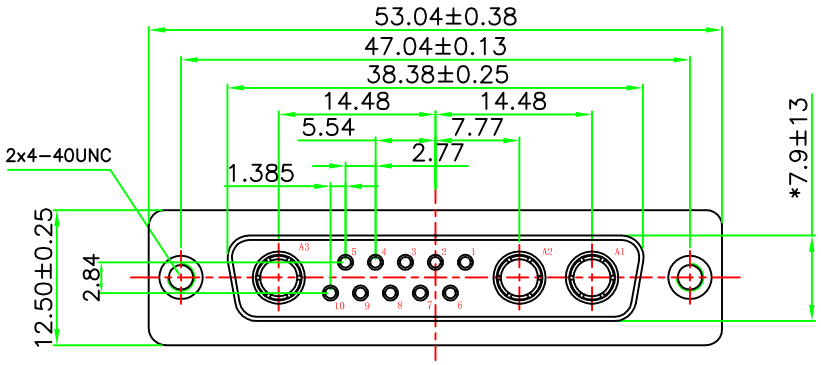

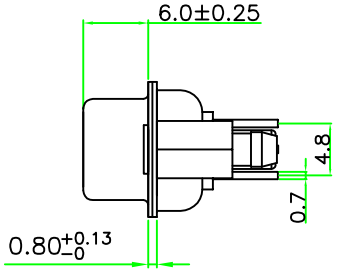

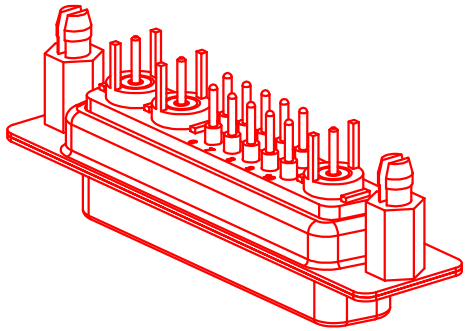

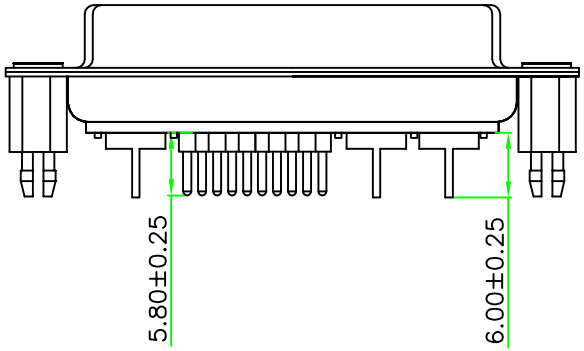

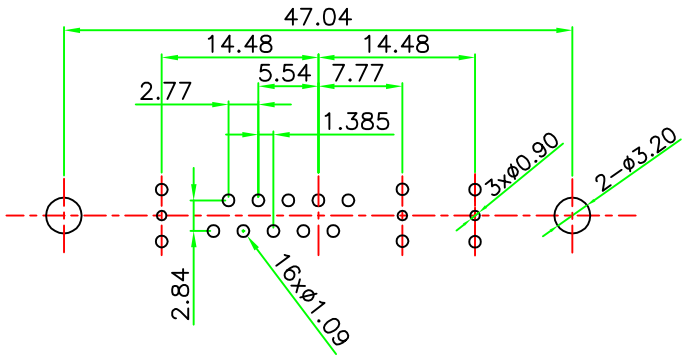

PCB LAYOUT

MATERIALS AND FINISH
SHELL:STEEL OR COPPER ALLOY MATERIAL,Tin/Ni OR Au FINISHED.
CONNECTOR INSULATOR:PBT THERMOPLASTIC,30% GLASS FILLED,UL 94V-0 RATED.
HIGHT FREQENCY CONTACT :COPPER ALLOY MATERIAL,GOLD PLATED.
CONNECTOR WITH SIGNAL CONTACT MATERIAL: COPPER ALLOY , GOLD PLATED.
FORK:COPPER ALLOY MATERIAL,Ni PLATED.
ELECTRICAL CHARACTERISTICS
HIGH FREQENCY CONTACT CURRENT RATING:50 OR 75 OHM.
THE RADIO FREQUENCYRANGE:0~3GHz.
CONNECTOR WITH SIGNAL CONTACT CURRENT RATING :3.0 AMPS.
THE WORKING VOLTAGE:300V.
HIGH FREQENCY CONTECT RESISTANCE:10 MILLIOHMS MAX.
DIELECTRIC WITHSTANDING VOLTACE:1000 V AC FOR 1 MINUTE.
INSULATION RESISTANCE:2000 MEGAOHMS MIN.
TEMPERATURE RATING:-55° ~+125° .

东莞市迅颢原精密连接器有限公司
Dongguan Signalorigin Precision Connector Co.,Ltd

TOLERANCE: X. ±0.38 X.X ±0.25 X.XX ±0.13 X.° ±5° X.X° ±2°	DRAWED BY : 杨剑玉	DATE : 2010.05.15	PART NAME: 13W3 母 射频直焊板式铆7.0鱼叉	
	CHECKED BY: 侯应文	DATE : 2010.05.15	PART NO.	XHY-05-2220
UNIT: mm [inch]	APPROVED BY: 胡 超	DATE : 2010.05.15	MOLD NO.	FS13W3FXH0800000000000
SCALE:1:1 SIZE: A4			REMARK	
			DRAW NO.	